Training Module

Describe Vortex Shedding Flowmeters

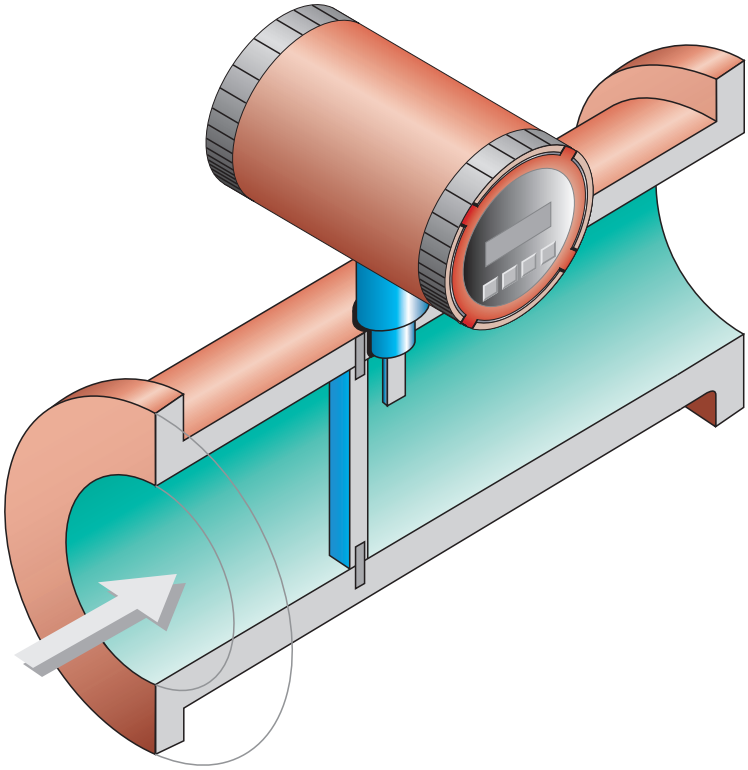

HDC Human Development Consultants Ltd.

© HDC Human Development Consultants Ltd.

All rights reserved. No part of this publication may be copied, reproduced, stored in a computer or retrieval system, published, distributed, or transmitted in any form or by any means whatsoever, including without limitation by mechanical means, photo copying, recording, digital or electronic media, the Internet, or otherwise, without the express prior written permission of HDC Human Development Consultants Ltd. (HDC). HDC grants to the purchaser of a **Single User License** (as defined in the agreement with such purchaser) a limited license to store the electronic file(s) on one computer only and to make a single paper copy of this publication. HDC grants to the purchaser of a Site License (as defined in the agreement with such purchaser) a limited license to store the electronic file(s) on one local area network server accessible by individual users' computers at one site or location only and to make paper copies of this publication for a company's employees at the same site or location only. Each site or location must purchase a separate **Site License** for employees at that site. HDC grants the purchaser of a **Corporate License** (as defined in the agreement with such purchaser) a limited license to store the electronic file(s) on its intranet and on computers at company sites or locations and to make paper copies for any or all employees. Nothing in the foregoing restricts, amends or abrogates the provisions of the agreement between HDC and the purchaser of the applicable license. Any copying or use other than pursuant to such a license is illegal. For further information, please consult the applicable license agreement.

This publication is designed to provide general information regarding the subject matter covered. Care has been taken to ensure the accuracy of the information and that the instructions contained in this publication are clear and reflect sound practice. The user understands that HDC is not providing engineering services. The user understands that any procedures (task steps) that are published or referenced may have to be modified to comply with specific equipment, work conditions, company standards, company policies and practices, legislation, and user qualifications. HDC does not make any representations, guarantees, or warranties of any kind whatsoever with respect to the content hereof and the results to be achieved by implementing the procedures (task steps) herein. To the maximum extent permitted by applicable law, in no event shall HDC be liable for any damages whatsoever (including without limitation, direct or indirect damages for personal injury, damages to the environment, damages to business property, loss of business profit, or any other pecuniary loss). The use of the information and procedures (task steps) herein is undertaken at the sole risk of the user.

ISBN 1-55338-029-0

Canadian Cataloguing in Publication Data

1. Flow meters. I. HDC Human Development Consultants.
TJ935.D485 2003 681'.28 C2003-900337-X

This training kit consists of the following parts:

- Training Module and Self-Check
- Knowledge Check and Answer Key
- Blank Answer Sheet
- Job Aid

Published by HDC Human Development Consultants Ltd.

Published in Canada

HDC Human Development Consultants Ltd.

Website: **www.hdc.ca**
E-mail: **marketing@hdc.ca**
Phone: **(780) 463-3909**

Contents

Training Objectives 1

1 Introduction 1
1.1 Velocity Flowmeters 2
1.2 Vortex Shedding Flowmeters 2
1.3 Vortex Meter Applications 2

2 Principle of Operation 3
2.1 The Von Karman Effect 4
2.2 Von Karman Effect Applied 5
2.3 Flow Calculations 5

3 Design and Components 7
3.1 Design 7
3.2 Components 11

4 Strengths and Limitations 16
4.1 Strengths 16
4.2 Limitations 16

5 Accuracy and Rangeability 17
5.1 Accuracy 17
5.2 Rangeability 19

6 Installation 19
6.1 Installation Guidelines 19
6.2 Dual Meter Installation 23

7 Operations Responsibilities 24
7.1 Operator Responsibilities 24
7.2 Maintenance Responsibilities 24

SAMPLE

Contents (continued)

8 Calibrating, Configuring, and Proving **25**
8.1 Calibrating 25
8.2 Configuring 25
8.3 Proving 26

9 Troubleshooting **27**

10 Self-Check **28**

11 Self-Check Answers **33**

Appendix **34**

SAMPLE

Training Objectives

Upon completion of this training kit, you will be able to:

- Describe the purpose and importance of velocity flowmeters
- Describe vortex shedding flowmeter (vortex meter) operation
- Describe common vortex meter components
- Describe vortex meter installation requirements
- Describe operations and maintenance responsibilities for vortex meters
- Describe vortex meter calibrating, configuring, and proving activities
- Describe fundamental vortex meter troubleshooting techniques

1 Introduction

SAMPLE

Flowmeters are devices used to measure the rate of flow of fluids. Accurate flow rate measurement in fluids (gases, liquids, and slurries) is critically important to industries such as:

- agriculture
- oil and gas
- food and beverage
- pharmaceutical and cosmetic
- pulp and paper
- water and wastewater treatment
- chemical
- nuclear and hydroelectric power generation
- mining, ore extraction, and metals

A company's profit or loss can depend on measurement accuracy. Over the years, many types of flowmeters have been developed to measure flow rates of different fluids. The goal has been to increase flow measurement accuracy and reliability for a wide range of flow rates and a wide variety of fluids. Each flow rate, fluid, and system offers special measurement problems.

The most common types of flowmeters determine flow rate by measuring one of the following:

- **differential pressure**: orifice plates, venturi tubes, pitot tubes (differential pressure meters are often called head meters)
- **positive displacement** (PD)(fixed volume): piston, gear
- **velocity**: vortex shedding, turbine, electromagnetic, ultrasonic
- **mass**: Coriolis, thermal

The first three categories of flowmeters (differential pressure, PD, and velocity) measure the *volume* flow rate of liquids. Volume flow rate is expressed as units of *volume* over time (e.g., cubic meters per hour or gallons per minute). Mass flowmeters measure the rate of *mass* flow of fluids directly. Mass flow rate is expressed as units of *mass* over time (e.g., kilograms per hour).

1.1 Velocity Flowmeters

Velocity flowmeters (vortex shedding, turbine, electromagnetic, and ultrasonic) measure the velocity of fluids; volume flow rate is calculated from the velocity and the diameter of the flow path. The relationship between velocity and volume flow rate is linear; for example, doubling the velocity doubles the volume flow rate.

Velocity flowmeters calculate mass flow rate from the measured volume flow rate and the density of the fluid.

1.2 Vortex Shedding Flowmeters

This training kit describes the vortex shedding flowmeter (vortex meter): operating principle, generic components, installation, calibration, maintenance, and proving requirements. The kit is for process operators and maintenance personnel responsible for the safe and effective operation of vortex meters. Troubleshooting techniques are also presented for generic vortex meter applications.

SAMPLE

1.3 Vortex Meter Applications

Vortex meters are used to measure flow in liquids and gases. Vortex meters are used in:

- steam applications (many different industries)
- central heat distribution systems (steam and hot water heating)
- petrochemical plants
- petroleum pipelines (liquid and gas)
- food and beverage processing
- pharmaceutical production
- natural gas combustion systems
- compressed air distribution systems
- industrial and municipal water distribution systems

Vortex meters are used for fluids that will produce measurable vortices, such as a clean, swirl-free, non-viscous liquid flowing at medium to high velocity.

Certain conditions reduce vortex meter accuracy in closed piping systems:

- low flow levels
- excessive vibration
- pulsed or intermittent flow
- high viscosity fluids
- non-homogeneous multiphase fluids

Vortex meters are approved for use in some custody transfer applications (e.g., municipal steam distribution systems).

SAMPLE

2 Principle of Operation

Vortex meter operation is based on a phenomenon of physics called the Von Karman effect.

2.1 The Von Karman Effect

The Von Karman Effect

The Von Karman effect occurs when a bluff body (a non-streamlined stationary object) is placed in a fluid stream. As the fluid moves past the bluff body, vortices (whirlpools) are formed in the fluid. The vortices move in the flowstream according to a predictable and measurable pattern (vortex shedding).

A flag waving in the wind demonstrates the Von Karman effect. The moving air (wind) is the flowing fluid and the flagpole is the bluff body. As the air flows past the flagpole, vortices are shed downwind of the flagpole, first on one side and then on the other. Vortex shedding causes the flag to ripple. If the air is moving slowly, the flag ripples slightly; as wind speed increases, the flag ripples more vigorously.

In nature, vortices also form in liquids. For example, whirlpools and eddies form in a river as water flows past a rock or bridge piling (see Figure 1).

SAMPLE

Figure 1— Vortex Shedding

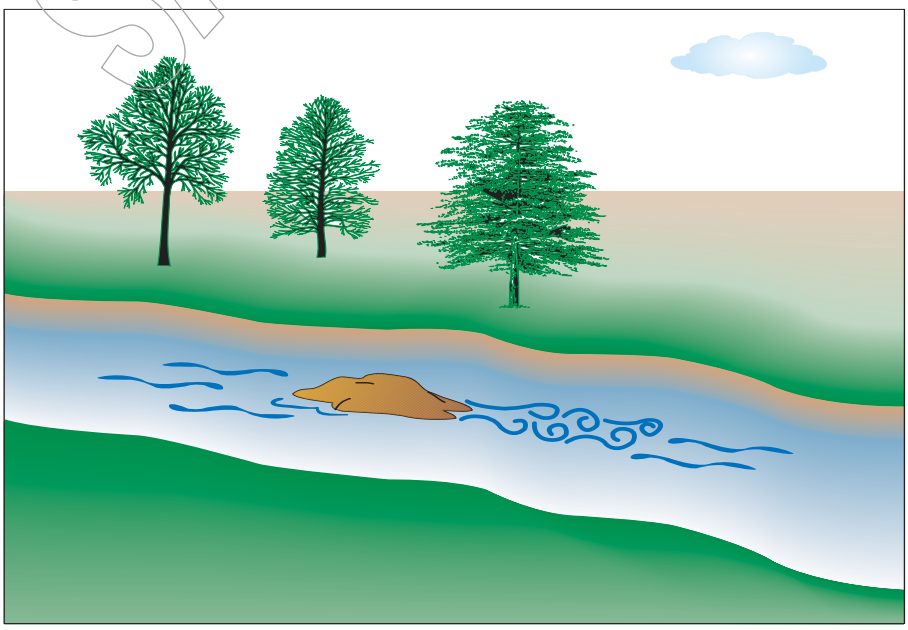

2.2 Von Karman Effect Applied

Alternating vortices form when a turbulent stream of fluid (gas or liquid) moving in a pipeline encounters a bluff body that intrudes into the flowstream (see Figure 2).

Figure 2— Vortex Formation in Closed Piping

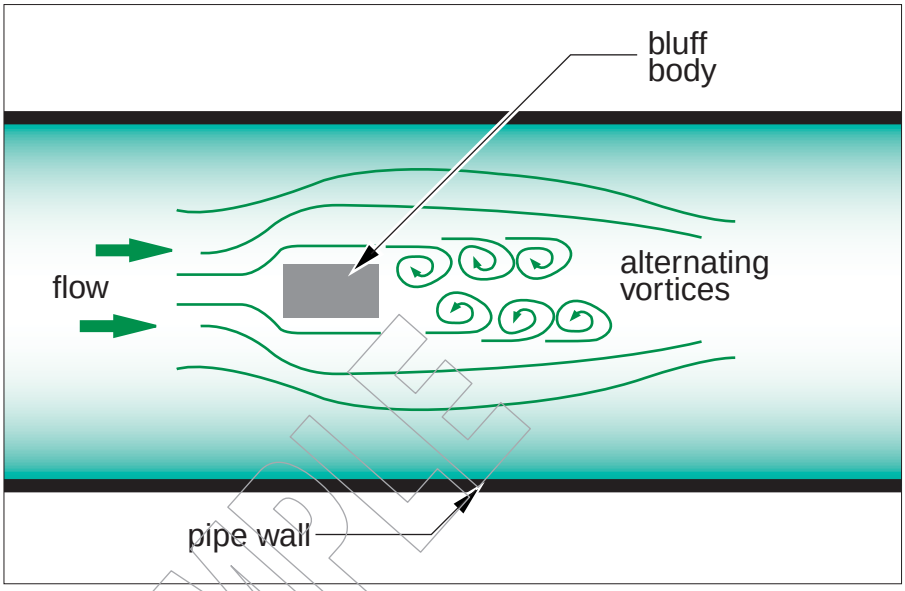

SAMPLE

The vortex shedding frequency (i.e., the number of vortices shed per second) is directly proportional to the flow velocity.

The vortex meter is an application of the Von Karman effect. Vortex meters measure the vortex shedding frequency and use the measurement to calculate flow velocity and volume flow rate. The vortex shedding frequency does **not** depend on fluid properties such as density, viscosity, and conductivity.

2.3 Flow Calculations

Vortex meters calculate volume flow rate from data received from the meter sensor (meter sensors are described in Section 3.2, Components).

Calculate Volume Flow Rate

$$Q = f/K$$

Where:
Q = the volume flow rate
f = the vortex shedding frequency
K = a constant defined as the number of vortices shed per unit volume

Note: The constant, K, is also known as the reference K factor. K is determined by the manufacturer, usually by wet calibration of the meter in a flow lab.

Using the reference K factor in the equation gives the actual volume flow rate. The actual volume flow rate is based on actual pressure and temperature conditions. Because volume varies with pressure and temperature, the actual volume flow rate may need to be converted to the flow rate under standard conditions:

- temperature 15°C (60°F)
- pressure 101 kPa absolute (14.7 psi absolute)

To adjust the volume flow rate from actual to standard conditions, the flowmeter modifies the *reference* K factor into a *flowing* K factor. The flowing K factor incorporates conversion factors to automatically convert the actual volume flow rate to the standard volume flow rate.

Depending on the model, the actual pressure and temperature values used to define the flowing K factor may be provided:

- manually, by an operator. Manual pressure and temperature values will need updating every time the actual conditions change (refer to Section 8.2).
- automatically from downstream or integral pressure/ temperature transmitters

SAMPLE

3 Design and Components

3.1 Design

In its simplest form, the body of a vortex meter consists of a bluff body and a sensor (see Figure 3). When the meter is placed in the flowstream:

- the bluff body is the obstacle that causes vortex formation in the fluid
- the sensor detects each passing vortex to determine the vortex shedding frequency

Figure 3— Simplified View of Vortex Meter

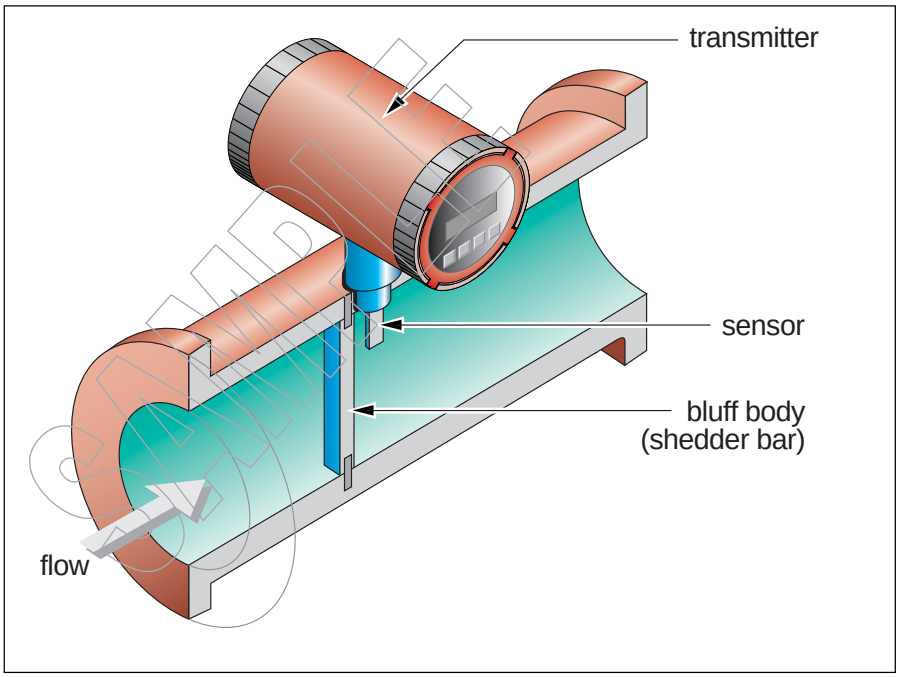

Vortex meters are generally available in three designs:

- spoolpiece (flanged or threaded)
- wafer
- insertion (probe)

Spoolpiece vortex meters and wafer-design vortex meters are equal in accuracy. Both types provide more accurate readings than insertion designs.

Alternative designs have been developed for use on non-metallic piping, such as on the small-diameter plastic pipes used in the semiconductor and pharmaceutical industries. In these applications, the bluff body may be metal or made of the same material as the pipe. Other components of the meter are also encased in the same non-metallic material as the pipe.

Spoolpiece Design

Spoolpiece-type vortex meters are permanently mounted in a flanged spoolpiece. A section of pipe must be removed to install the flanged spoolpiece (see Figure 4). Fluid-resistant gaskets are used to seal the connections. Although most spoolpiece-type vortex meters have flanged connections, some models have threaded or welded connections.

Figure 4— Flanged Vortex Meter

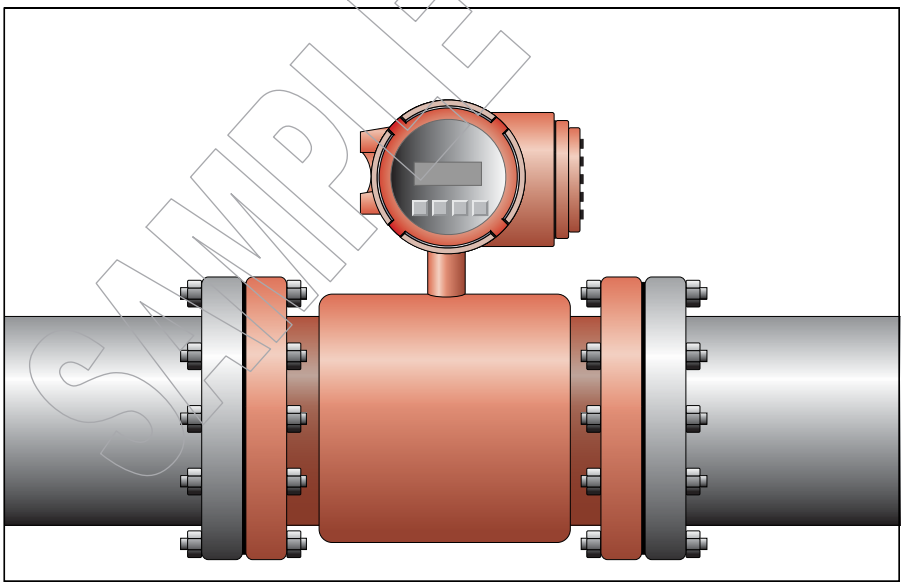

Spoolpiece vortex meters are available in diameters ranging from 1.25 cm (0.5 in.) to 30.5 cm (12 in.) for a wide variety of fluids and applications.

Wafer Design

Wafer-type vortex meters are mounted on a stainless steel ring (*wafer*) that is sandwiched between two flanged sections of pipe (see Figure 5) as follows:

- the connection is sealed by gaskets to prevent leakage
- long bolts clamp the flowmeter between the two sections of pipe

Figure 5— Wafer Vortex Meter

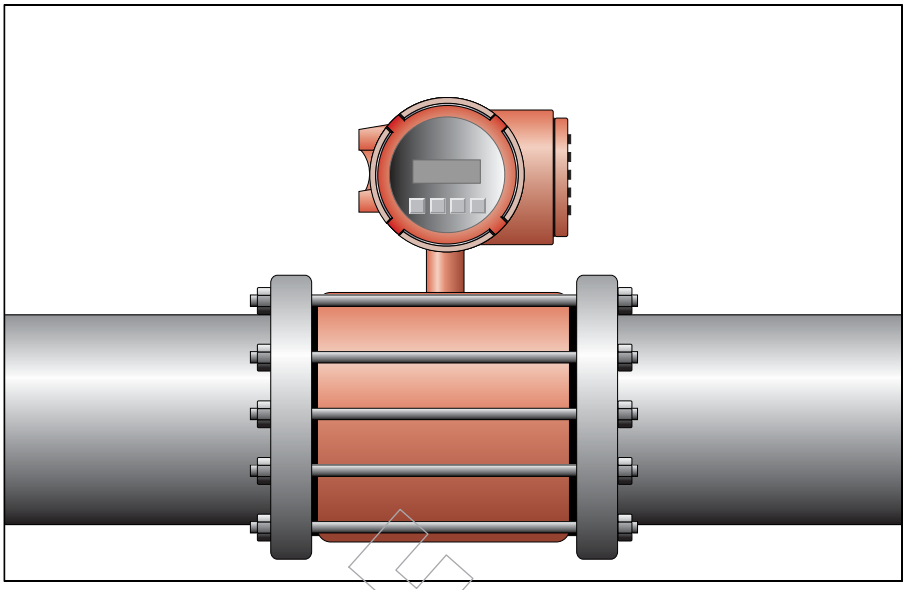

Wafer vortex meters are available in diameters ranging from 1.25 cm (0.5 in.) to 30.5 cm (12 in.). Wafer vortex meters are often used for steam or other high-temperature fluids and for very small piping. Wafer-vortex meters are considered a lower-priced alternative to the spoolpiece design.

NOTE

Because the long bolts may stretch or fail, some piping codes restrict the use of wafer vortex meters to fluids that:

- are not hazardous
- do not fluctuate widely in temperature

Insertion design

As the name implies, insertion-type vortex meters are inserted into the fluid flowpath and held in place by a tapped connection on the side of the pipe. The tap may be temporary or permanent and the connection must be sealed. Figure 6 shows an insertion vortex meter.

SAMPLE

Figure 6— Insertion Vortex Meter

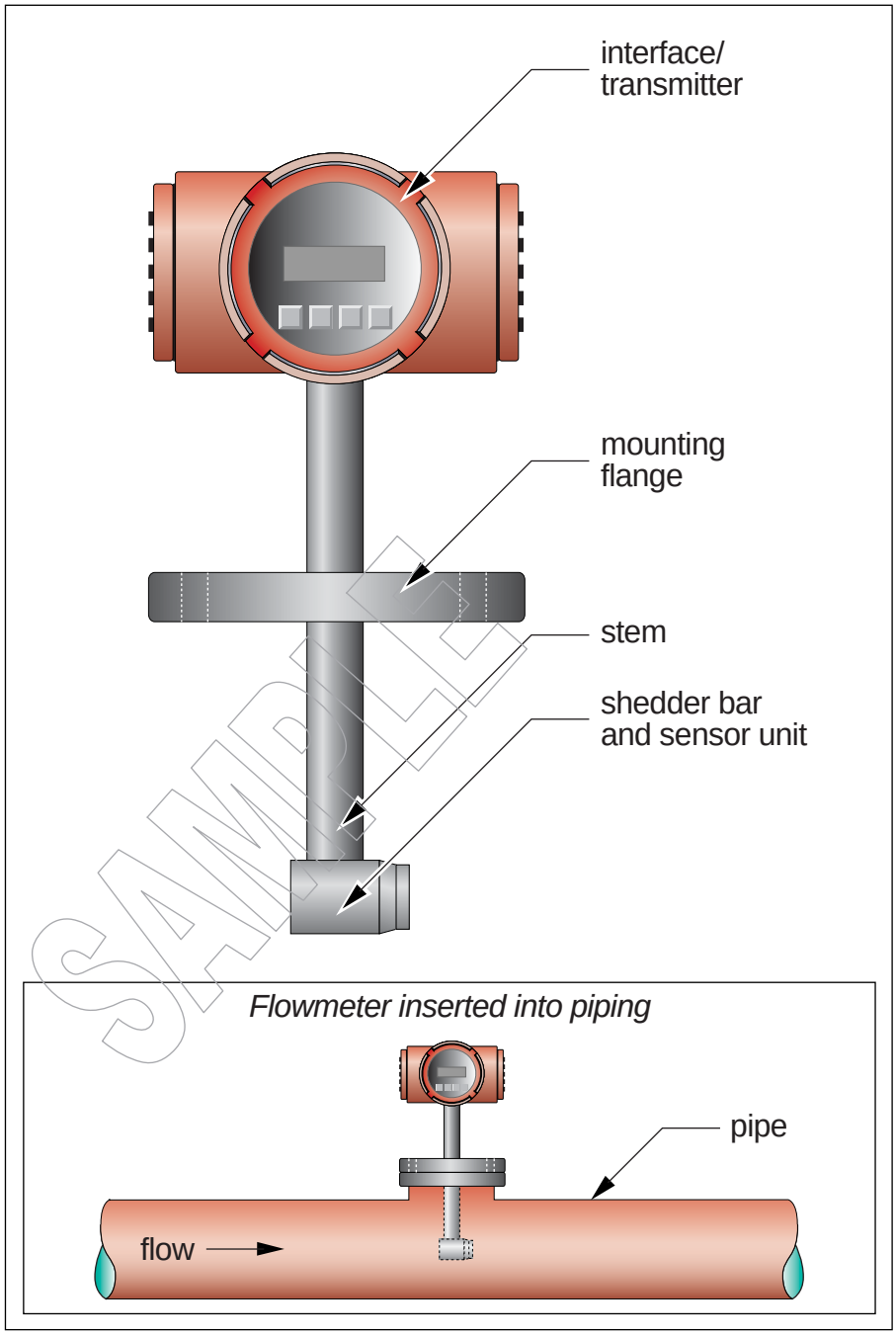

Insertion-design flowmeters are generally used for locations where occasional measurements are required, or on piping too large in diameter for flanged or wafer vortex meters. Insertion flowmeters are not as accurate as the wafer or flanged designs because only part of the flowstream passes through the meter body.

3.2 Components

The basic components of a vortex meter include:

- shedder bar
- sensor
- transmitter electronics (mounted locally or remotely), including:
  - user interface
  - transmitter
  - auxiliaries

Shedder Bar

Manufacturers use shedder bars of various shapes, including rectangular, trapezoidal, and T-shaped bars and round shedder discs, to create the vortices (see Figure 7). The shape of the shedder bar does not have a significant effect on the formation of vortices.

If the shape of a shedder bar changes during meter operation, the measurement accuracy of the meter may be affected. The shape of the shedder bar may change:

- because of wear; however, significant wear must occur before meter accuracy is affected.
- because solid material has gradually coated the bar and sensor. Coatings increase the size of the shedder bar and interfere with sensors embedded in the shedder bar and can affect flowmeter accuracy.

SAMPLE

Figure 7— Shedder Bar Shapes

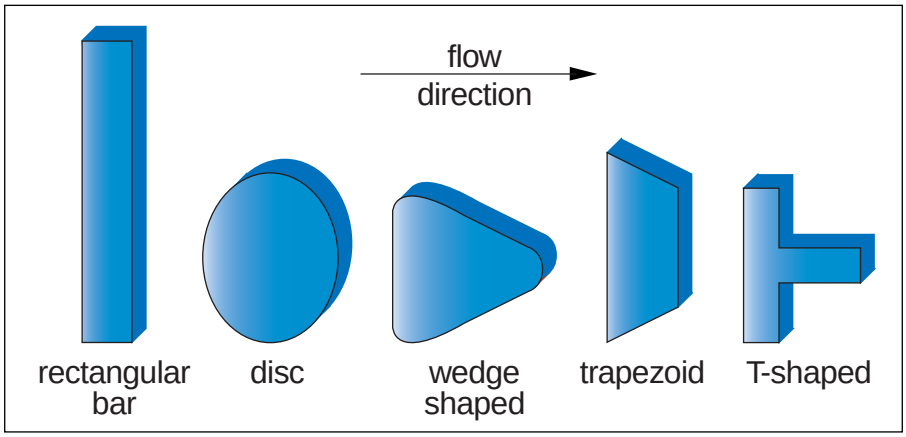

For a specific shedder bar shape, measurement accuracy is primarily affected by the size of the shedder bar. The correct size depends on pipe diameter. To produce reliable vortices in large pipes, a large shedder bar is required.

Shedder bars are usually constructed of corrosion-resistant metal (e.g., stainless steel or a patented alloy). The shedder bar may be fitted into the spoolpiece or wafer in a sealed mounting, or welded or fabricated as an integral piece of the meter body. Welded or fabricated bars are designed to prevent leakage.

Shedder bars in some of the early vortex meters were prone to corrosion and erosion from process fluids (particularly fluids containing suspended solids). Shedder bar longevity has improved with the development of new, wear-resistant alloys.

Sensor

Vortex detection sensors:

- detect the presence of vortices
- send the vortex detection data to the transmitter for processing

Most vortex detection sensors are piezoelectric crystals; crystal-based sensors can be used over a wide range of conditions. Piezoelectric crystals respond to the pressure changes that occur as a vortex moves past the sensor. The pressure changes buffet the sensor causing the piezoelectric crystals to strain. When strained, piezoelectric crystals generate an electric voltage.

Because the pressure in the fluid changes as a vortex moves past the sensor, the voltage generated by the sensor changes. The changing sensor voltage is processed at the transmitter and converted to the shedding frequency. (The frequency is then used to determine the flowrate, as described in Section 2.3.)

SAMPLE

NOTE

Other types of vortex detection sensors are available, including:
- strain gauge velocity sensors
- ultrasonic sensors
- capacitance sensors
- heated thermistors

The type of sensor and sensor position vary, depending on the manufacturer and model. Sensors may be:
- internal (located inside the pipe and embedded in either the shedder bar or in a separate mounting near the shedder bar)
- external (located at the top of the shedder bar outside the pipe)

Internal sensors contact the process fluid. Internal sensors are more sensitive and can measure lower flow rates than external sensors. Internal sensors are more accurate than external

End of Sample

A full licensed copy of this kit includes:
• Training Module and Self-Check
• Knowledge Check and Answer Key
• Blank Answer Sheet
• Job Aid

SAMPLE